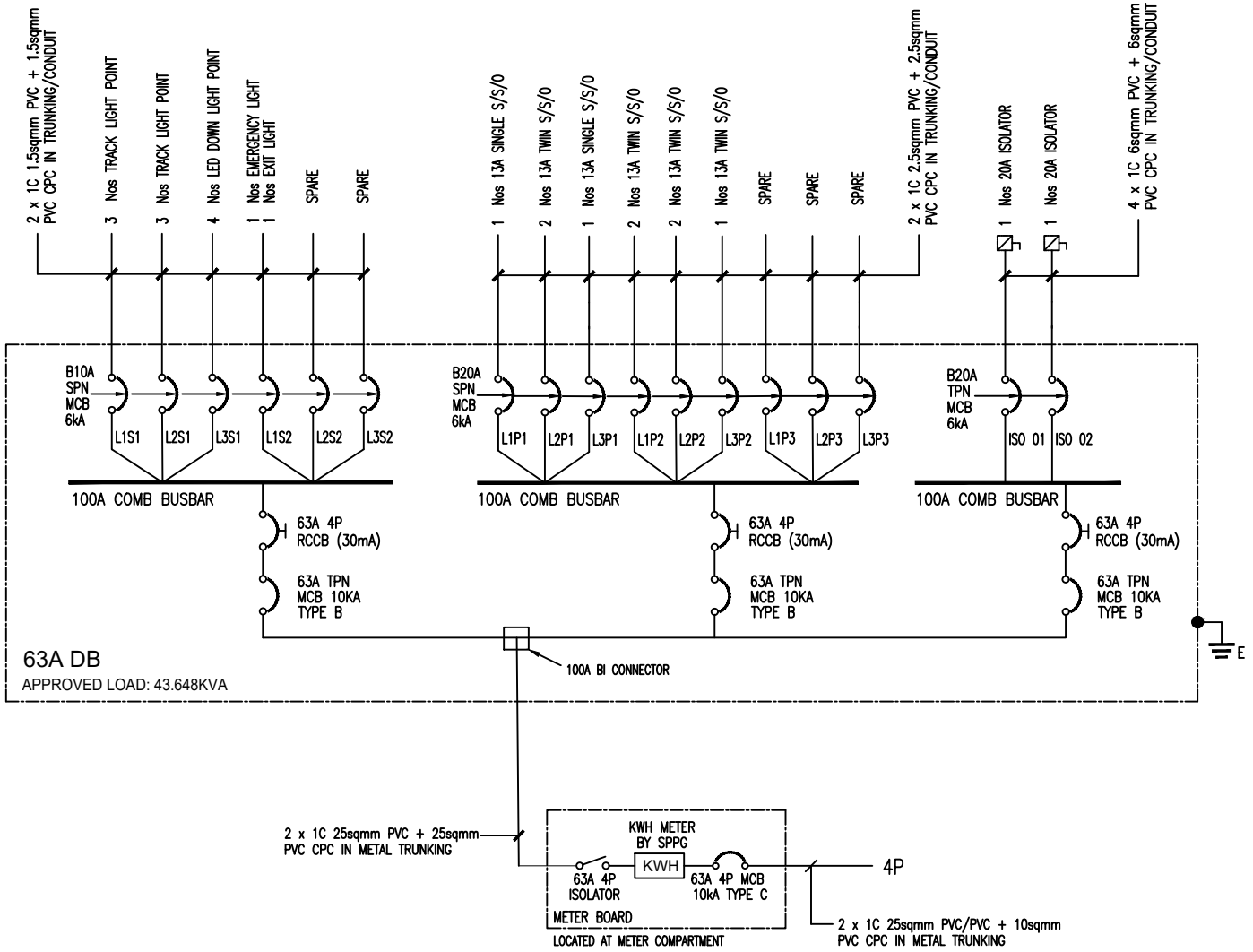

CLIENT / ADDRESS :	CONSULTANT :	ELECTRICAL CONTRACTOR :	DRAWING TITLE :	LEW :	CHECKED :	DATE :
Slurp Food Enterprise Pte Ltd 11 MANDAI ESTATE #08-09 S729908		I2R M&E PTE. LTD. 709 Yishun Avenue 5 #01-K1 Singapore 760709 TEL: 9777 1983	SINGLE LINE DIAGRAM (SLD)		Ryan	10 FEB 2025
					DRAWING NO. : I2R-SLURP-SLD-01	REV : 0